Power System:

USB<->UART:

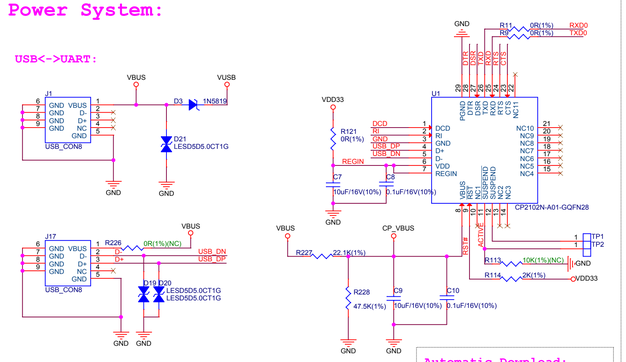

Charge Circuit:

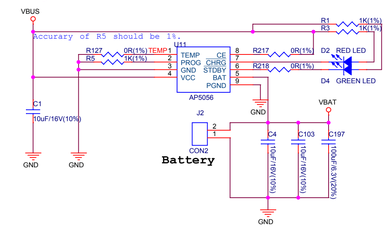

Power Switch:

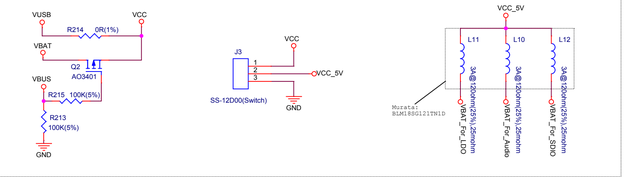

PA Output:

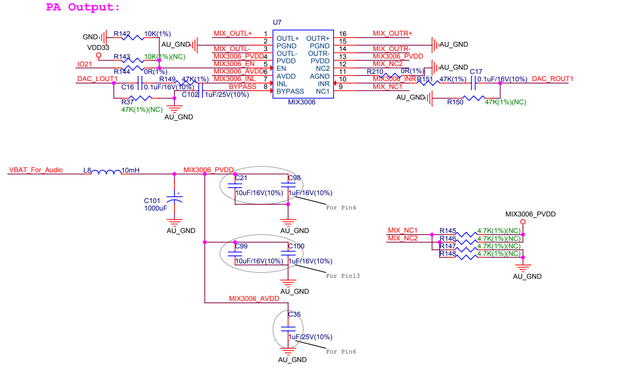

Automatic Download:

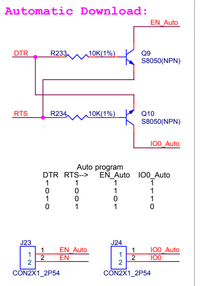

Digital System:

ESP32 Module

The blue NETNAME means 1.8V level.

the black color means INPUT only
the green color means 32K oscillator input,as reserved
but here they are used as TOUCH Function

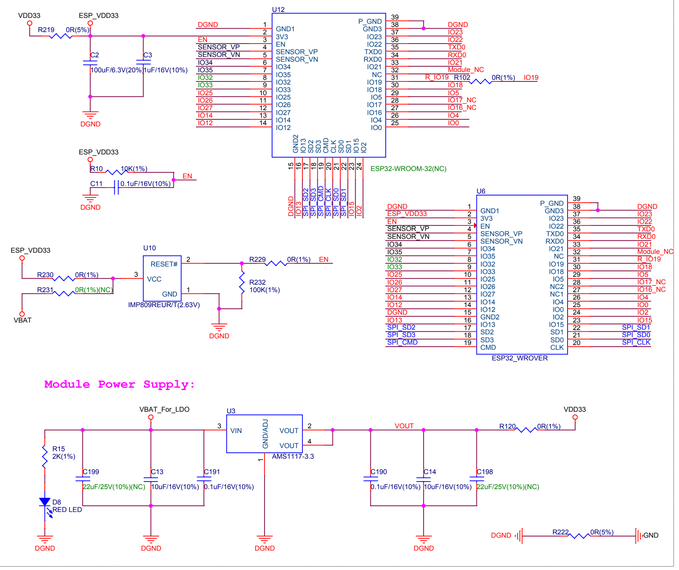

Module Power Supply:

4-Touch-Pads & 2-Keys:

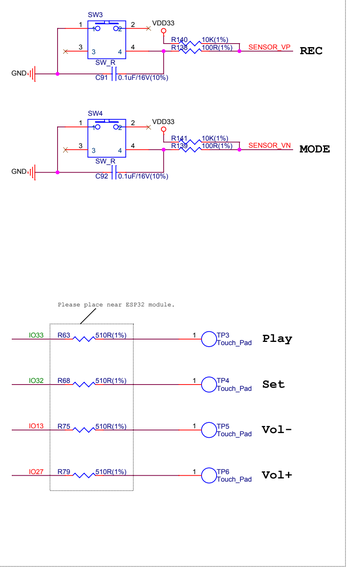

LEDs:

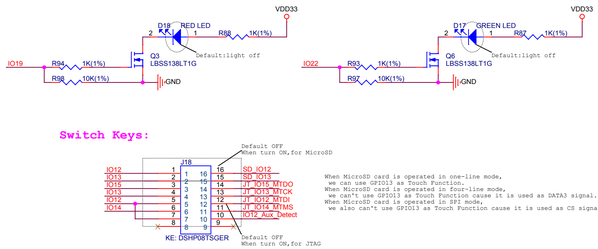

Switch Keys:

JTAG

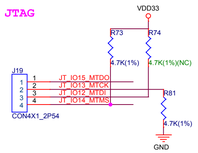

UART

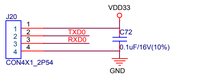

I2C

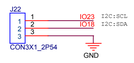

I2S

Reset/Download Button:

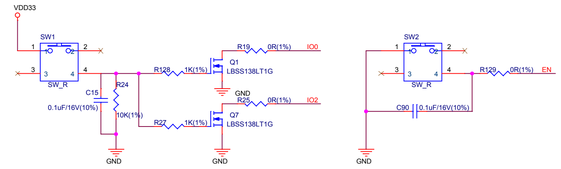

SD_CARD:

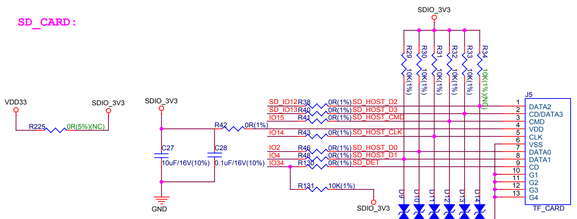

SDIO Power Supply:

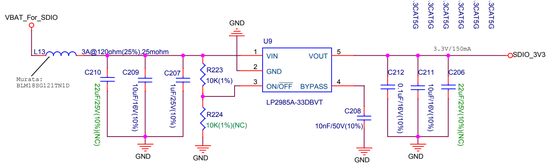

Fixing Holes:

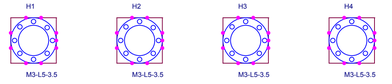

Analog System:

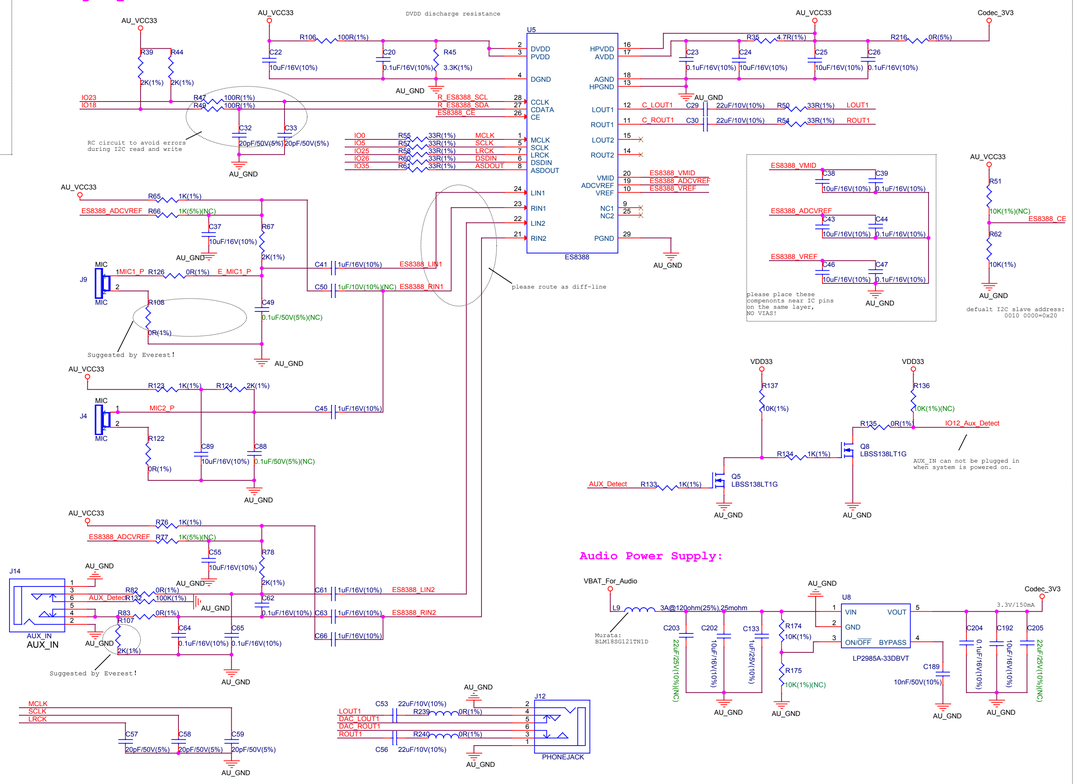

Audio Power Supply:

ESPRESSIF 乐鑫信息科技（上海）有限公司			
Title	ESP32_LyraT		
Size D	Document Number <Doc>		Rev 4.2
Date: Friday, March 16, 2018		Sheet 1 of 1	